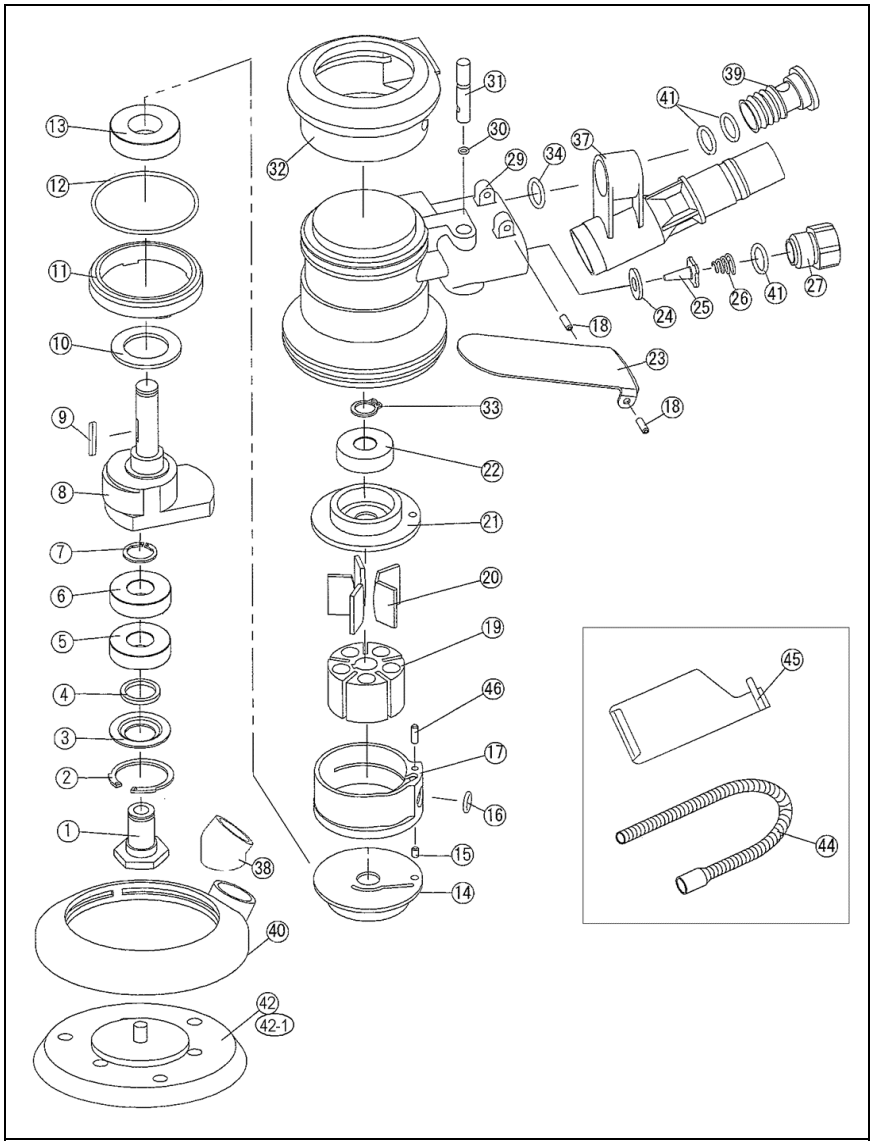

910-0101D Double Action Sander KD-101D (Dust Free)

Index No.	Code	Description	Qty	Price (JPY)
1	4411	Balancer shaft	1	2,060
2	4424	Retaining ring	1	210
3	4413	Felt cover	1	360
4	4412	Felt ring	1	210
5	4369	Ball Bearing	1	780
6	2450	Ball Bearing	1	750
7	2577	Retaining ring	1	160
8	4402	Shaft	1	6,300
9	4495	Long key	1	220
10	4410	Dust seal	1	110
11	4492	Lock ring	1	1,260
12	4421	O-Ring	1	260
13	4425	Ball Bearing	1	720
14	4403	Front End Plate	1	2,480
15	4385	Spring pin	1	110
16	5002	O-Ring	1	100
17	4405K	Cylinder	1	6,000
18	1449	Spring pin	2	100
19	4431	Rotor	1	4,280
20	4406	Vane	5	400
21	4404	Rear End Plate	1	2,480
22	3256	Ball Bearing	1	720
23	4417	Valve lever	1	800
24	4415	Seal washer	1	500
25	4416	Chip valve	1	600
26	4418	Valve spring	1	160
27	4419	Air Inlet Bushing	1	720
29	4400	Housing(Red	1	6,200
30	4420	O-Ring	1	110
31	4414	Valve stem	1	600
32	4401	Housing cover	1	1,360
33	3253	Retaining ring	1	110
34	2211	O-Ring	1	100
37	4434	Exhaust diffuser	1	3,200
38	4435	Exhaust adaptor	1	600
39	4436	Exhaust plug	1	740
40	4423	Lip seal(Dust ext.)	1	2,500
41	4438	O-Ring	3	110
42	5501	Φ123 Back-up Pad VP 7 holes	1	
42-1	5503	Φ123 Back-up Pad LP 7 holes	OP	
44	4443	Dust collection hose	1	2,400
45	4445	Dust collection bag	1	2,300
46	4386	Spring pin	1	110

*Parts may be changed with/without notice.

Printed in Japan March, 2020
Kovax Corporation